Quick Start Guide

TensioLogger TRL

Figure 1: Top view of the data logger TRL. All ports and connectors are marked.

Power Supply

- recommended range for supply voltage: **4.5 to 12 VDC** (e.g. 4 Batteries with 1.5V in series)
- absolute maximum rating for supply voltage: **16.0 VDC**
- **Caution:** when a solar panel is used in combination with a solar charge controller the voltage might be higher than 16.0 VDC which will damage the data logger. Make sure the output of the charge controller will never exceed 16.0 VDC.

Connection to PC (for configuration and data readout)

- Big black 4-pin connector in the center of the logger. A USB-RS485 adapter cable is required for connection to the PC. The cable is sold separately.
- Pinout of the black 4-pin connector:

Pin 1:	+5V	(brown)	(Pin 1 marking see picture above)
Pin 2:	GND	(white)	
Pin 3:	RS-485-A	(green)	
Pin 4:	RS-485-B	(yellow)	

⚠ Please do not connect other cables to this connector. Only use the original USB adapter cable.

Sensor Ports

- The data logger supports sensors with RS-485 interface and T-Bus protocol such as the soil moisture sensor SMT100.
- There are 4 ports (green 4-pin connectors) which share a common RS-485 bus signal. The sensor supply voltage for each port can individually be switched on and off by the logger program (figure 2).
- If only up to 4 sensors are connected to the data logger, there is no need to take care for the individual sensor T-Bus address. Each sensor can be connected to its own port and the supply voltage can be individually switched on and off.
- If more than 4 sensors are connected to the logger, the sensors can be connected to any of the 4 ports using a defined T-Bus address for each sensor. There is a maximum of 256 sensors which can be connected to a data logger. However, for most practical applications it is recommended not to use more than approximately 20 sensors on each RS-485 bus line when longer cables are used.

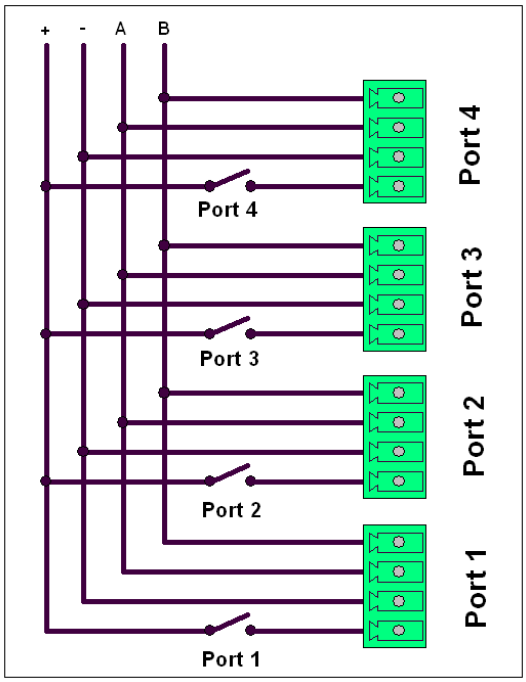

Figure 2: Schematic of the 4 sensor port connectors of the data logger. The supply voltage for each sensor port can individually be switched on and off by the logger program.

- Pinout of the green sensor connectors:

Pin 1:	+V_supply	(brown)	(switched supply voltage of the battery pack)
Pin 2:	GND	(white)	
Pin 3:	RS-485-A	(green)	
Pin 4:	RS-485-B	(yellow)	

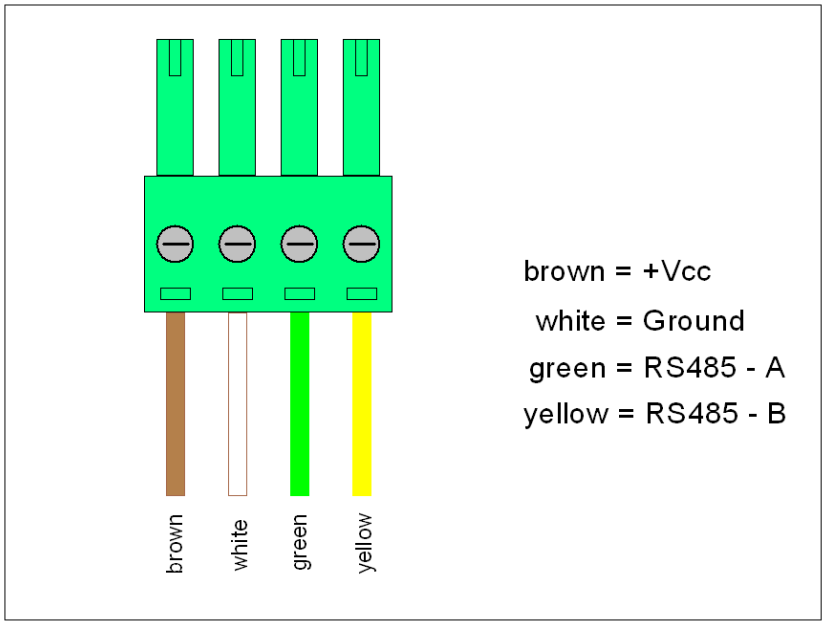

Figure 3: Pinout of the sensor connectors. Mount the green connectors with the correct polarity of the signals to the sensor cable.

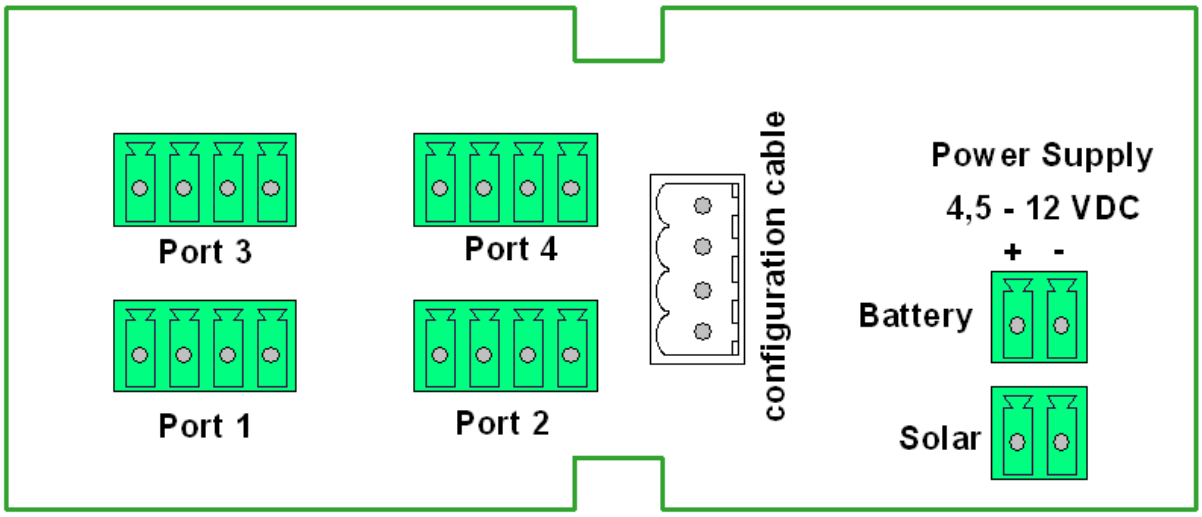

Figure 4: Position and numbering of the connectors. It is mandatory to connect a supply voltage to the 2-pin battery port. The solar port is optional and can be left unconnected if no solar cell is used.

Connection of the data logger to the PC

Introduction

- For configuration of the data logger it must be connected to a PC via the USB-RS485 adapter cable (see figure 5).

- It is mandatory to supply the logger with a supply voltage of 4.5 to 12 VDC during configuration. It is not possible to supply the data logger via the USB cable.

- The data logger is automatically set to the configuration mode when the USB cable is properly connected. Then the logger waits for commands from the configuration software. After the configuration is complete, the configuration cable must be removed from the logger. Then the logger automatically starts logging according to the stored program.

⚠ **Caution:** The USB configuration cable must be removed from the data logger in order to automatically start logging. It is not sufficient to only unplug the USB connector from the PC. Make sure the black 4-pin connector of the configuration cable is removed from the logger!

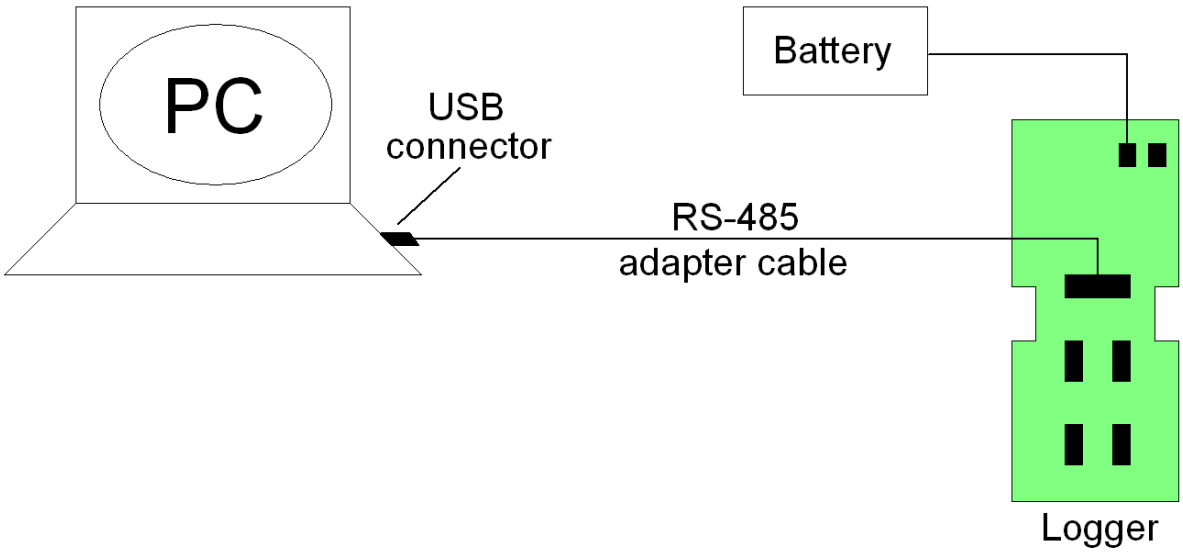

Figure 5 : Data logger TrueLog100 connected to the PC. It is mandatory to supply the data logger with a voltage of 4.5 to 12 VDC (e.g. from the battery pack). It is not possible to supply the logger via the USB cable.

Configuration Software

The free configuration software for the TensioLogger can be ask at info@tensio.de

It is recommended to reboot your computer after installation of the software.

After starting the program, the following screen (figure 6) appears:

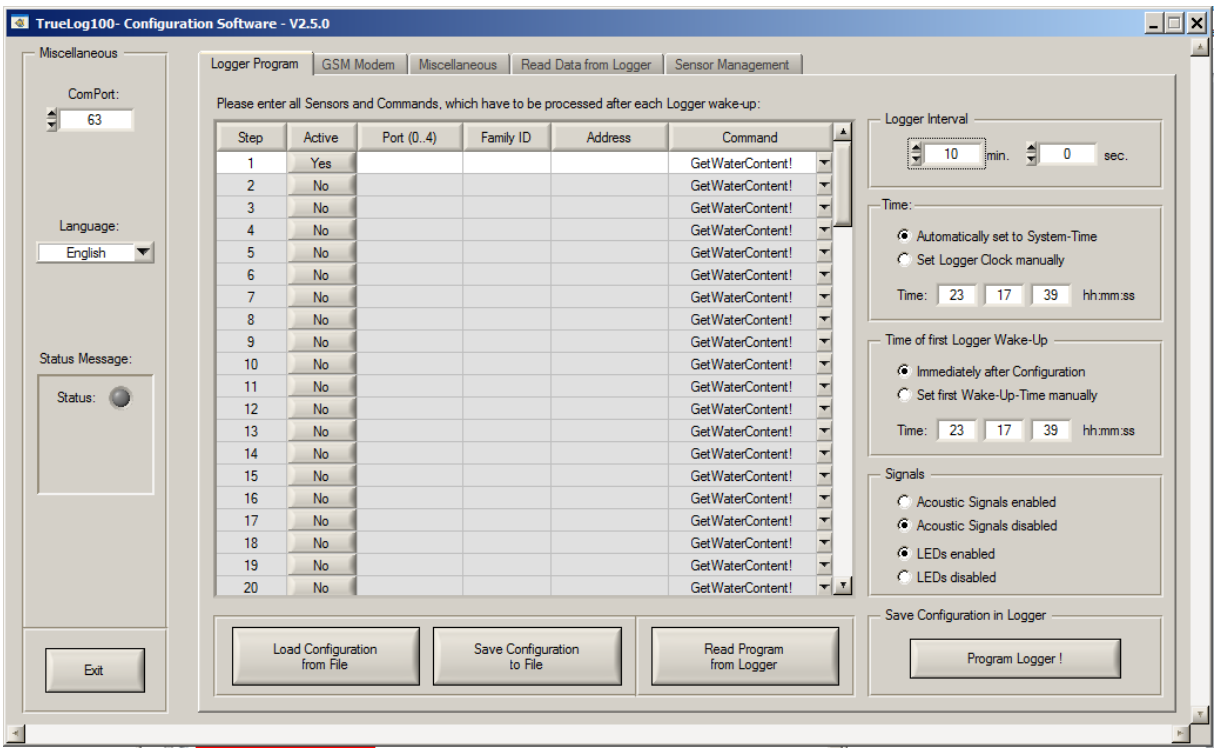

Figure 6: Screenshot of the configuration software after launching the program.

On the left side the correct ComPort (Serial Port) must be entered. Windows automatically assigns a port number after plugging in the USB cable (USB driver is required!). You find the correct port number of your computer in the windows device manager. In the example below (figure 7) the serial port has the number 63 (COM63). The port number may vary from computer to computer.

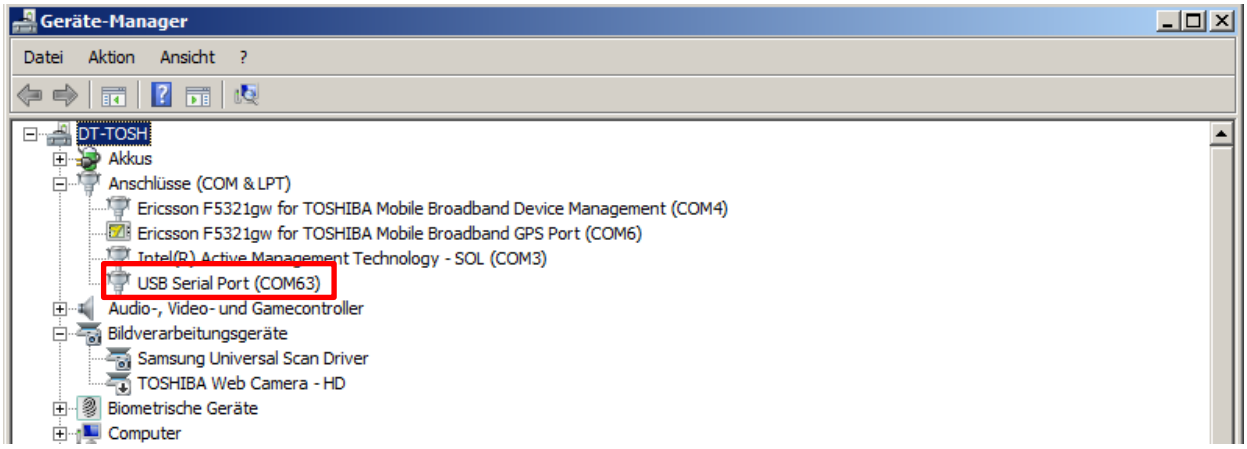

Figure 7: Screenshot of the Windows device manager. In this example the port number is 63.

Note: The serial port is only visible in the device manager, when the USB cable is plugged in and when the correct USB driver is installed. When the USB cable is connected for the first time, Windows automatically searches for the USB driver and will install it. Therefore the PC must be connected to the internet. The installation may take up to a few minutes and some computers require a reboot sequence after installation of the USB driver.

As soon as the USB driver is installed properly, the cable will be recognized by Windows within a few seconds in the future.

Description of the 5 Tabs of the configuration software

Tab 1: Logger program

- All settings which are required for configuration of the logger are found on the first tab. The table contains the complete sequence which is logged each time the logger wakes up. Each table line corresponds to a command which is sent to the connected sensor(s). The sensor response is logged.
  Each table line contains the information about the used port (1…4), the T-Bus family ID, the sensor address and the command. Each line can be “activated” or “deactivated” by clicking on the button “Yes / No”. This allows for easy test and modification of an existing logger program.

- It is possible to save the logger program (complete table) to file by pressing the button “Save Configuration to File”. The settings can be recalled at any time using the button “Load Configuration from File”.

- It is possible to read back the current configuration of a data logger by pressing the button “Read Program from Logger”.

- The complete logger configuration including the interval and clock settings on the right side of the screen are programmed by pressing the button “Program Logger!”

- Caution: It is possible to enter a very short wakeup interval (e.g. 1 sec.). However, the user must ensure that it is possible to read out and log all sensors within the programmed interval. Reading one single measurement value from a sensor takes up to 1 second including data transfer.

- The clock of the logger is automatically programmed. Usually the logger clock is set to the PC clock. The logger clock is buffered by an integrated battery which is soldered to the logger PCB. The clock is running up to 15 years with the integrated battery.

- The first logger wakeup can be initiated immediately after removing the USB cable and reaching the programmed interval settings or by selecting a defined wakeup time.

- The logger can issue signals using the 2 LEDs and the beeper. This is useful for debugging and testing. However, the signals can be switched off when they are not required.

Tab 2: GSM-Modem

Only required for data loggers which are equipped with a GSM modem. Otherwise the checkbox must be unchecked as shown below (figure 8).

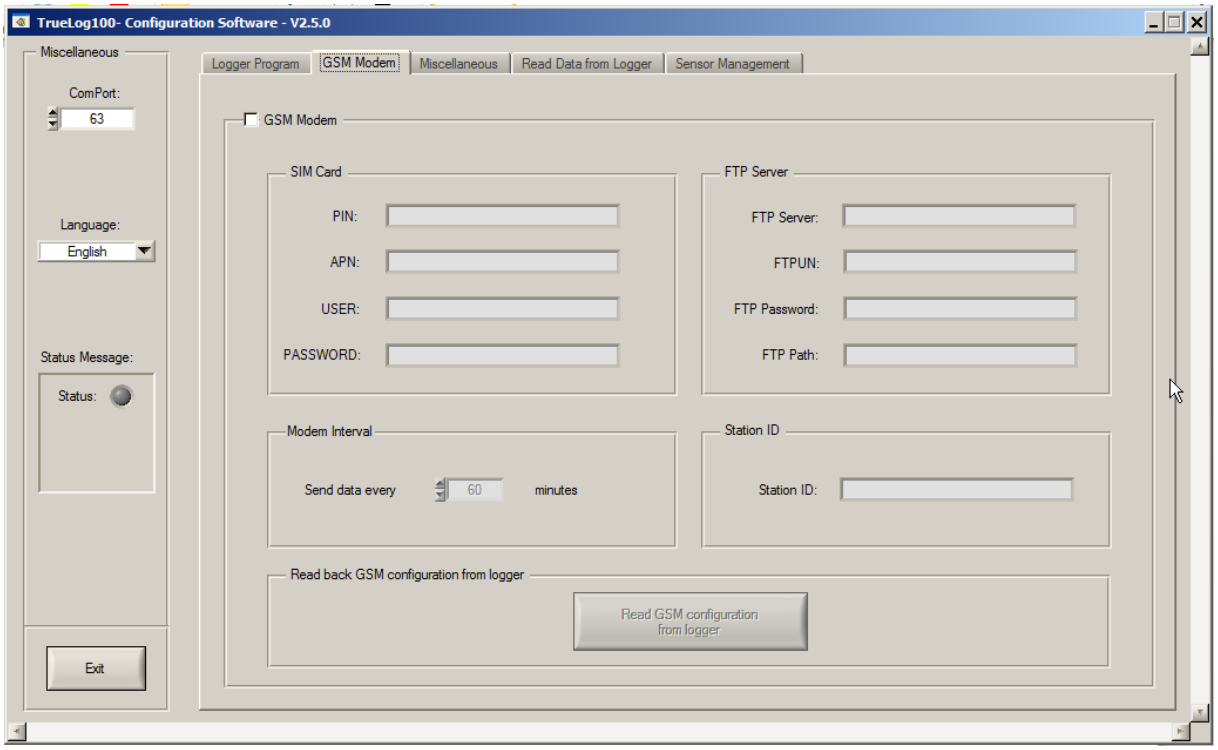

Figure 8: Tab 2 of the logger software. The GSM settings are not relevant, when the logger is not equipped with a GSM modem. The checkbox “GSM Modem” is unchecked.

Tab 3: Miscellaneous

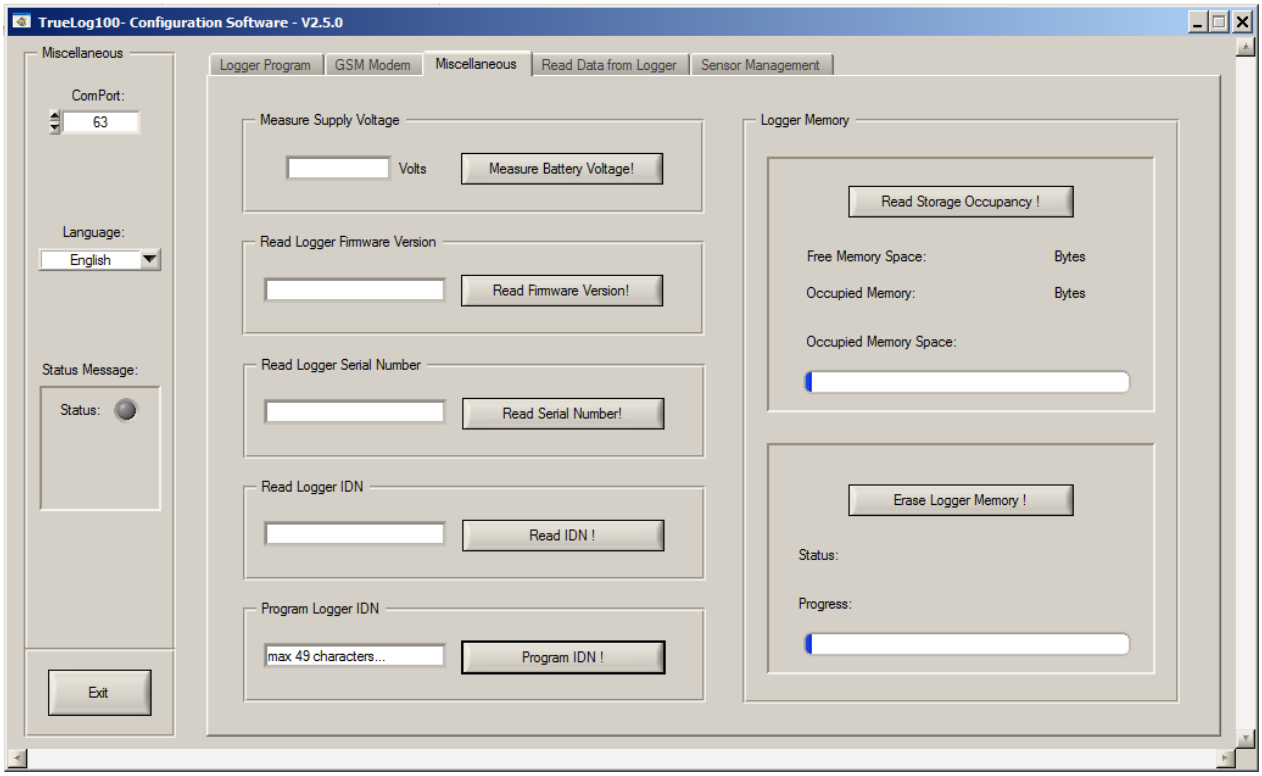

Figure 9: Tab 3 of the logger software. Miscellaneous options are provided such as erasing the logger memory or reading the serial number and firmware version of the logger.

- The actual supply voltage (battery voltage) can be read with a tolerance of +/- 20mV.

- The firmware version of the data logger can be read. This is important for technical support.

- The serial number of the data logger can be read. This is important for technical support.
- Each data logger has a field “IDN” which can be programmed and read by the user. It is often used to store e.g. the name of the measurement site / location where the logger is used.

- On the upper right side it is possible to read the actual storage occupancy of the logger.

- On the lower left side it is possible to erase all stored data. Data will never be erased automatically. The only way to erase stored data is to press the button “Erase Logger Memory!”. After erasing the memory, the data is lost and cannot be recovered. It is recommended to erase the logger memory each time a new logger program is stored into the logger.

Tab 4: Read Data from Logger

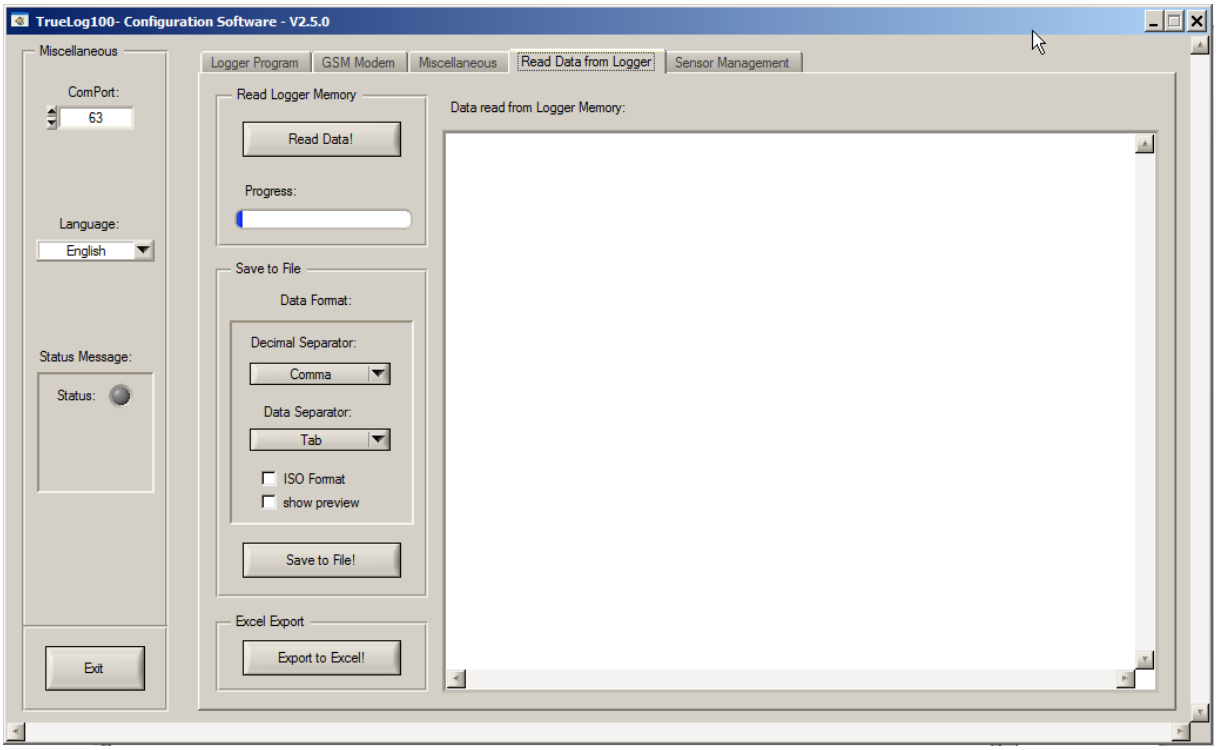

Figure 10: Tab 4 of the logger software. Miscellaneous options are provided for data readout, data formatting and storing to file.

- All stored data is read from the logger memory after pressing the button “Read Data!”. Reading the complete logger memory may take a while depending on the amount of stored data. The read data is displayed “as it is” in the white textbox. The data is not automatically saved to file.

- The data can be formatted and saved to a textfile using the “Save to File” options.

- It is possible to automatically transfer data into Microsoft Excel (when installed on the computer) pressing the button “Export to Excel!”. However, this is only recommended for relatively small sets of data up to a few hundred lines. Otherwise the export might take a quite long while.

Tab 5: Sensor Management

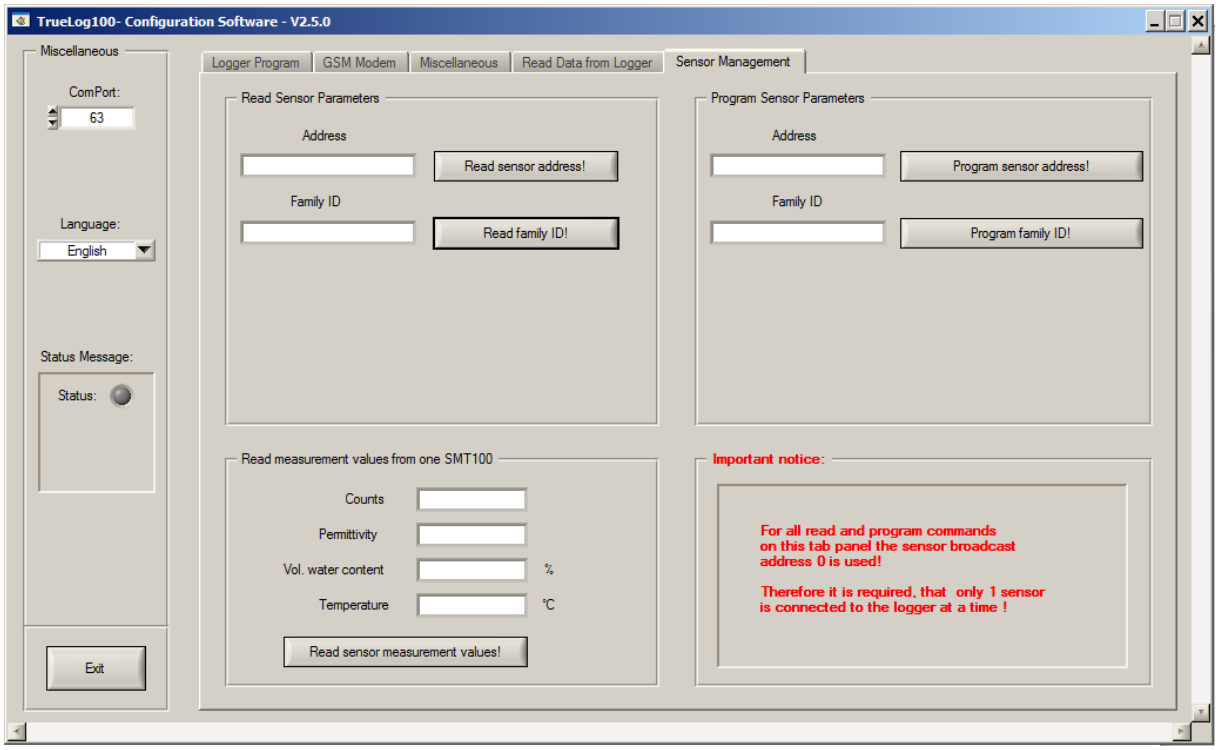

Figure 11: Tab 5 of the logger software. The address of a sensor can be programmed and read back.

Each sensor must have its own unique address if more than 4 sensors are used on the data logger. It is easy to program an address to a sensor. Just connect a **single** sensor to the logger, enter the new address and press the button "Program sensor address!".

Warning:

The PC software sends a broadcast command when the address is programmed. This means that all connected sensors would have the same address. Therefore it is very important to connect only 1 single sensor at a time when programming the sensor address. Never try to program a sensor address when more than 1 single sensor is connected to the bus!

The sensor may be connected to any of the 4 logger ports when programming a new address.

Read the actual measurement values of the sensor SMT100:

The software allows for reading the actual measurement values of a **single** sensor SMT100 which is connected to the logger. The software sends a broadcast command to the sensor. This will not work, when multiple sensors are connected to the logger, because all sensors would send the response at the same time. The data is not stored in the logger memory. Readout of the sensor is only for testing.

Appendix: Example Configuration 1

The following example shows how to configure the data logger for a maximum of **up to 4** sensors. Each sensor is connected to an individual port (green 4-pin connectors). It is not required to take care for the address of each sensor. Each sensor is selected by switching the supply voltage of the port on and off. It must be ensured, that not more than 1 single sensor is connected to each of the 4 green 4-pin ports.

Step	Active	Port (0..4)	Family ID	Address	Command
1	Yes	1	0	0	GetWaterContent!
2	Yes	2	0	0	GetWaterContent!
3	Yes	3	0	0	GetWaterContent!
4	Yes	4	0	0	GetWaterContent!
5	No				GetWaterContent!
6	No				GetWaterContent!

Figure 12: Example configuration for 4 sensors which are connected to the 4 ports of the logger.

Note: The T-Bus protocol allows for grouping sensors or actors within “Families” using an 8-bit Family-ID. This is not required for just logging sensor data. Therefore the “Family-ID” can always be set to “0” in the logger program.

Explanation Table Line 1: The logger will switch on the supply voltage of port 1, so only the sensor which is connected to port 1 will be powered. All other sensors remain off. The logger sends the command “GetWaterContent!” to all sensors using the Family-ID “0” and the sensor address “0”. The address “0” is the broadcast address which means that any sensor will respond to this address, regardless of its individual programmed address.
However, in this case only the sensor which is connected to port 1 can measure and respond to the command, because the supply voltage is switched on only here.

Explanation Table Line 2: The logger will switch on the supply voltage of port 2, so only the sensor which is connected to port 2 will be powered. All other sensors remain off. The logger sends the command “GetWaterContent!” to all sensors using the Family-ID “0” and the sensor address “0”. The address “0” is the broadcast address which means that any sensor will respond to this address, regardless of its individual programmed address.
However, in this case only the sensor which is connected to port 2 can measure and respond to the command, because the supply voltage is switched on only here.

…

Appendix: Example Configuration 2

In the following example there are 4 sensors connected to the logger. Each sensor must have its own individual address. In this example the sensors have the addresses 1, 2, 3 and 4. The logger sends the commands to each specific sensor address. In this case all sensors can be powered at the same time, because only one sensor will respond at a time (the sensor which matches the address).

Step	Active	Port (0..4)	Family ID	Address	Command
1	Yes	0	0	1	GetWaterContent!
2	Yes	0	0	2	GetWaterContent!
3	Yes	0	0	3	GetWaterContent!
4	Yes	0	0	4	GetWaterContent!
5	No				GetWaterContent!
6	No				GetWaterContent!

Figure 13: Example configuration for 4 sensors which are connected to one port of the logger.

Note: Address “0” is always the broadcast address and each sensor will always respond to this address. Therefore it is not possible to use address “0” here in this example. Otherwise all sensors would try to respond at the same time which is not possible.

Note: As the sensors are individually addressed in this example, it is possible to power them at the same time. Therefore it is possible to enter port “0” which means that the supply voltage of all ports (port 1…4) is switched on at the same time.

Explanation Table Line 1: The logger is switching on the supply voltage of all 4 ports at the same time. The command “GetWaterContent!” is sent to all 4 sensors using the address “1”. Only one sensor will respond to this command (the sensor with the programmed address “1”). All other sensors which do not match the address will simply ignore the command. They will not measure and they will not respond.

Explanation Table Line 2: The logger is switching on the supply voltage of all 4 ports at the same time. The command “GetWaterContent!” is sent to all 4 sensors using the address “2”. Only one sensor will respond to this command (the sensor with the programmed address “2”). All other sensors which do not match the address will simply ignore the command. They will not measure and they will not respond.